TEACHING INSTRUCTIONAL DESIGN (BRP)

COURSE

ELECTRONICS 1

Drs. Sastra Kusuma Wijaya, M.Sc., Ph.D.
Dr. Prawito
Dr. rer. nat. Martarizal

Undergraduate Program in Physics
Faculty of Mathamatics and Natural Sciences
Universitas Indonesia
Depok

May 2016

PREFACE

Teaching Instructional Design (BRP) of Electronics 1 Course is the first part systematic teaching design from two sequential courses, Electronics 1 and Electronics 2. In this course, students learn the basic concepts of analog electronics, learn more in details of its application to the amplifying system. At the end of the lecture, students present the assignments given by the lecturer according to the topic that has been delivered.

In addition to lecturing, Electronics 1 course also uses e-Learning developed by the university which can be accessed through the website (scele.ui.ac.id) or usually called SCeLe (Student Centered eLearning Environment) UI.

We hope, this BRP can be used as a reference for learning process for lecturers and students, as well as people who wish to learn about this course.

Depok, May 2016

Drs. Sastra Kusuma Wijaya, M.Sc., Ph.D.

Dr. Prawito

Dr. rer. nat. Martarizal

I. General Information

1.	Name of Program / Study Level	:	Physics / Undergraduate
2.	Course Name	:	Electronics 1
3.	Course Code	:	SCFI602311
4.	Semester	:	3
5.	Credit	:	3 credits
6.	Teaching Methods	:	Self-Directed Learning, Case Study, Simulation, Problem Based Learning, Project Based Learning, eLearning (scele)
7.	Prerequisite course (s)	:	Electricity and Magnetism
8.	Requisite for course (s)	:	Electronics 2
9.	Integration Between Other Courses	:	Laboratory Work of Electronics 1
10.	Lecturers	:	1. Drs. Sastra Kusuma Wijaya, M.Sc., Ph.D. 2. Dr. Prawito 3. Dr. rer. nat. Martarizal
11.	Course Description	:	Power supply, semiconductor, theory of diode and the circuits, diode for specific needs, bipolar-junction transistor (BJT), pre-voltage transistor, basic transistor amplifier circuit, voltage amplifier, junction field effect transistor (JFET), MOSFET, Basic structure of operational amplifier (Op-Amp) and its properties, linear Op-Amp circuits: Inverting and non-inverting amplifier, summing amplifier, DC imperfections, differential amplifiers, instrumentation amplifiers, voltage-controlled current sources (VCCS), Op-Amp operation with single supply, active filters, nonlinear Op-Amp circuits: Comparators, Integrators, Differentiators, Active Diode Circuits, directional oscillators and power supply.

II. Course Learning Outcome (CLO) and Sub-CLOs

A. CLO

Students are able to solve the problems and apply analog electronics in the fields related to diodes, transistors and operational amplifiers (Op-Amps) (C3) (ELO 2, 5, 6, 7)

B. Sub-CLOs

1	To explain the Voltage Sources & Current Sources characterizations, Thevenin's Theorem, Norton's Theorem and to apply it in a simple electronics circuits for troubleshooting. (C2, C3)	1
2	To explain the introduction of Semiconductor Concept, Diode PN Junction, Unbiased and biased for troubleshooting application. (C2, C3)	1
3	To explain and to apply PN-Diode and Zener diode for troubleshooting application. (C2, C3)	1
4	To explain the Transistor characterizations, Transistor Models and Transistor Biasing for troubleshooting application. (C2, C3)	1
5	To explain the AC Transistor Model's and to apply (C3) in the design of an AC voltage amplifier for troubleshooting. (C2, C3)	1
6	To explain the Common Collector and the Common Base and its applications in the design of the power amplifier for troubleshooting. (C2, C3)	2
7	To explain the basic concept of FET for troubleshooting application. (C2, C3)	1
8	To explain (C2) the basic concept Operational Amplifier and its applications (C3) on linear Op-amp circuits and troubleshooting. (C2, C3)	1
9	To explain (C2) the Basic Filter's Concepts and to apply (C3) on active filters for troubleshooting. (C2, C3)	1
10	To explain (C2) and to apply (C3) Non-linear Op-Amp Circuits for troubleshooting. (C2, C3)	2
11	To explain (C2) the Power Supply Regulator (linear and switching) for troubleshooting. (C2, C3)	1
12	To construct simple analog electronics circuits (C3)	1

III. Teaching Plan

Week	Sub-CLO	Study Materials	Teaching Method	Time Required	Learning Experiences (*O-E-F)	Sub-CLO Weight on Course (%)	Sub-CLO Achievement Indicator	References
1	1	DC Circuits	Self-Directed Learning, Case Study, Simulation, Problem Based Learning	150 minutes	O: Introduction (10%) E: Quiz (30%) F: Feedback (60%)	8	To explain the concept of: a) Voltage Sources & Current Sources b) Thevenin's Theorem, Norton's Theorem and to apply for troubleshooting	No. 1 Chapter 1, pp.1
2	2	Semiconductor & theory of Diode	Self-Directed Learning, Case Study, Simulation, Problem Based Learning	150 minutes	O: Introduction (10%) E: Quiz (30%) F: Feedback (60%)	8	To explain the concept of: a) Introduction of Semiconductor, b) Diode PN Junction, Unbiased and biased and to apply for troubleshooting	No. 1 Chapter2 &3 pp.29
3	3	Diode Circuits	Self-Directed Learning, Case Study, Simulation, Problem Based Learning	150 minutes	O: Introduction (10%) E: Quiz (30%) F: Feedback (60%)	8	To explain the concept of: a) Diode characterizations, Diode Models b) Rectifiers c) A Filter Capacitor d) Special-purpose Zener diode e) Clipper, Limiter, Clampers, and Voltage Multiplier and to apply for troubleshooting	No. 1 Chapter 3,4&5, pp. 89
4	4	Voltage bias Transistor	Self-Directed Learning, Case Study, Simulation, Problem Based Learning	150 minutes	O: Introduction (10%) E: Quiz (30%) F: Feedback (60%)	8	To explain the concept of: a) Transistor characterizations, Transistor Models b) Transistor Biasing and to apply for troubleshooting	No. 1 Chapter 6,7& 8 pp.189

5	5	AC Transistor Model	Self-Directed Learning, Case Study, Simulation, Problem Based Learning	150 minutes	O: Introduction (10%) E: Quiz (30%) F: Feedback (60%)	8	To explain the concept of: a) AC Beta b) AC Resistance of the Emitter Diode c) Analyzing an Amplifier and to apply for troubleshooting	No. 1 Chapter 9 & 10 pp.287
6	6	Operational Amplifier	Self-Directed Learning, Case Study, Simulation, Problem Based Learning	150 minutes	O: Introduction (10%) E: Quiz (30%) F: Feedback (60%)	8	To explain the concept of: a) CC & CB Amplifiers b) Cascading CE and CC c) Darlington d) Class A, B & C Amplifiers e) Push-Pull Amplifiers and to apply for troubleshooting	No. 1 Chap 11 &12 pp.345
7	7	FET	Self-Directed Learning, Case Study, Simulation, Problem Based Learning	150 minutes	O: Introduction (10%) E: Quiz (30%) F: Feedback (60%)	8	To explain the concept of: a) FET architectures b) JFET and Biasing c) MOSFET and Biasing d) JFET and MOSFET Amplifiers and to apply for troubleshooting	No. 1 Chap 13 & 14 pp.425
8	**Mid-Term Exam**							
9	8	Op-Amp circuits	Self-Directed Learning, Case Study, Simulation, Problem Based Learning	150 minutes	O: Introduction (10%) E: Quiz (30%) F: Feedback (60%)	8	To explain the concept of: a) Op-amp Characterization (ideal and non-ideal) b) Negative Feedback c) Linear op-amp d) Single supply Operation OP-Amp and to apply for troubleshooting	No. 1 pp.110-121; no. 2 pp.93-139
10	9	Filter Circuits	Self-Directed Learning, Case Study, Simulation,	150 minutes	O: Introduction (10%) E: Quiz (30%) F: Feedback (60%)	8	To explain the concept of: a) Introduction of Filter b) Passive-Filter RC	No. 1 pp.121-137; no. 2 pp.139-163

			Problem Based Learning				c) Sallen's & Key's configurations d) Biquadratic and State-Variable Filters and to apply for troubleshooting	
11	10	Non Linear Op-amp	Self-Directed Learning, Case Study, Simulation, Problem Based Learning	150 minutes	O: Introduction (10%) E: Quiz (30%) F: Feedback (60%)	8	To explain the concept of: a) General comparators b) Comparators with Hysteresis c) Integrator, Differentiator d) Precision Rectifiers and to apply for troubleshooting	No. 1 pp.121-137; no. 2 pp.139-163
12	11	Power Supply Regulator	Self-Directed Learning, Case Study, Simulation, Problem Based Learning	150 minutes	O: Introduction (10%) E: Quiz (30%) F: Feedback (60%)	8	To explain the concept of: a) Power Supply characterization b) Shunt Regulator & Serial c) IC Regulator d) Current Booster e) DC to DC Convertor f) Power supply Switching and to apply for troubleshooting	No. 1 pp.160-193; no. 2 pp.165-169
13	12	Project Task	Project Based Learning	150 minutes	O: Introduction (10%) E: Presentation (80%) F: Feedback (10%)	12	To construct a kit.	
14	13	Project Task	Project Based Learning	150 minutes	O: Introduction (10%) E: Presentation (80%) F: Feedback (10%)			
15	14	Project Task	Project Based Learning	150 minutes	O: Introduction (10%) E: Presentation (80%) F: Feedback (10%)			
16	**Final Exam**							

*) O : Orientation
E : Exercise
F : Feedback

References:

1. A. Malvino, D. J. Bates, Electronic Principles, 7thed, McGraw-Hill Book Co., 2006.
2. D.A. Neamen, Microelectronics: Circuit Analysis and Design, 4th ed, McGraw-Hill

IV. Assignment Design

Week	Assignment	Sub-CLO	Assignment	Scope	Working Procedure	Deadline	Outcome
1	Quizzes (online & class assignment) Homework & Simulation	1	Problem set	Writing resume of a topic Working on essay Doing a simulation	Individual Assignment & Online Task	150 minutes	Answer sheet Attachment files
2	Quizzes (online & class assignment) Homework & Simulation	2	Problem set	Writing resume of a topic Working on essay Doing a simulation	Individual Assignment & Online Task	150 minutes	Answer sheet Attachment files
3	Quizzes (online & class assignment) Homework & Simulation	3	Problem set	Writing resume of a topic Working on essay Doing a simulation	Individual Assignment & Online Task	150 minutes	Answer sheet Attachment files
4	Quizzes (online & class assignment) Homework & Simulation	4	Problem set	Writing resume of a topic Working on essay Doing a simulation	Individual Assignment & Online Task	150 minutes	Answer sheet Attachment files
5	Quizzes (online & class assignment) Homework & Simulation	5	Problem set	Writing resume of a topic Working on essay Doing a simulation	Individual Assignment & Online Task	150 minutes	Answer sheet Attachment files
6	Quizzes (online & class assignment) Homework & Simulation	6	Problem set	Writing resume of a topic Working on essay Doing a simulation	Individual Assignment & Online Task	150 minutes	Answer sheet Attachment files
7	Quizzes (online & class assignment) Homework & Simulation	7	Problem set	Writing resume of a topic Working on essay Doing a simulation	Individual Assignment & Online Task	150 minutes	Answer sheet Attachment files
9	Quizzes (online & class assignment) Homework & Simulation	8	Problem set	Writing resume of a topic Working on essay Doing a simulation	Individual Assignment & Online Task	150 minutes	Answer sheet Attachment files

10	Quizzes (online & class assignment) Homework & Simulation	9	Problem set	Writing resume of a topic Working on essay Doing a simulation	Individual Assignment & Online Task	150 minutes	Answer sheet Attachment files
11	Quizzes (online & class assignment) Homework & Simulation	10	Problem set	Writing resume of a topic Working on essay Doing a simulation	Individual Assignment & Online Task	150 minutes	Answer sheet Attachment files
12	Quizzes (online & class assignment) Homework & Simulation	11	Problem set	Doing a simulation	Individual Assignment	150 minutes	Presentation file in *power point* format
13-15	Project Task	12	Design Project	Construct electronics boards	Individual Assignment	150 minutes	Presentation file in *power point* format

V. Assessment Criteria (Learning Outcome Evaluation)

Evaluation Type	Sub-CLO	Assessment Type	Frequency	Evaluation Weight (%)
Online quizzes (Pre & Post Test)	1 - 11	Scele	11	20
Class assignment (Pre & Post Test)	1 - 11	Answer sheet	11	
Homework & Simulation	1 - 11	Scele	11	10
Project Task	12	Answer sheet	1	10
Mid-Term Exam	1 - 7	Answer sheet	1	30
Final Exam	8 - 11	Answer sheet	1	30
Total				**100**

VI. Rubrics

A. Criteria of Presentation Scores

Score	Presentation Delivery
85-90	Group is able to deliver the explanation logically, fluently, and punctual and be able to answer the questions from other students and lecturer
75-84	Group is able to deliver the explanation logically and fluently and be able to answer the questions from other students and lecturer, but be less punctual on delivering the explanation
65-74	Group is able to deliver the explanation fluently, but be less able to deliver the reasoning logic of the explanation
55-64	Group is less able to deliver the explanation fluently and punctual and be less able to deliver the reasoning logic of the explanation
<55	

B. Criteria of Essay Scores

Score	Answer Quality
100	Answer is very precise and all the concept and main component are explained completely
76-99	Answer is fairly precise and the concept and main component are explained fairly completely

51-75	Answer is less precise and the concept and main component are explained less completely
26-50	Answer is poorly precise and the concept and main component are explained poorly
<25	Answer is wrong

VII. Appendix: Example of Exam Problems

Appendix 1 . Example of Pre Test

Note: This quiz is not currently available to your students

Page: (Previous) 1 2 3 **4** 5 6 7 8 (Next)

7
Marks: --/1

Treating a connecting wire as a conductor with zero resistance is an example of the

Choose one answer.

- a. Higher approximation
- b. Second approximation
- c. Ideal approximation
- d. Exact model

Submit

8
Marks: --/1

The voltage out of an ideal voltage source

Choose one answer.

- a. Depends on the value of load resistance
- b. Is zero
- c. Depends on the internal resistance
- d. Is constant

Submit

Save without submitting | Submit page | Submit all and finish

Appendix 2 . Example of Quizzes

1. Beda Voltage source dan Current Source
2. Grafik stiff
3. Bgmn menentukan Vth Rth bila ada blackbox
4. Hitung IL untuk rangkaian sederhana, gunakan Vth dan Rth

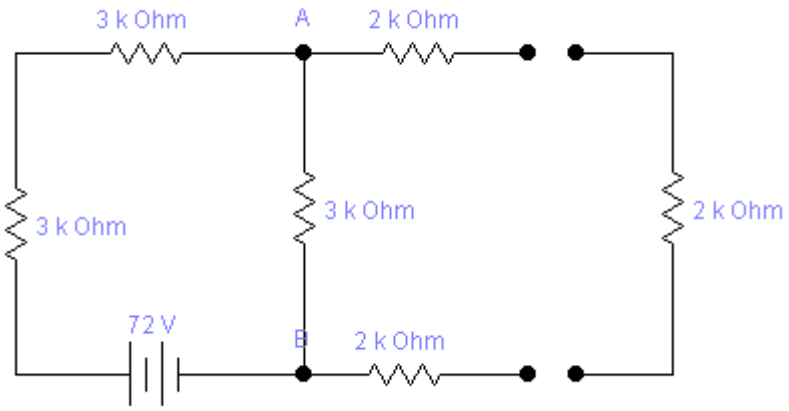

Appendix 3 . Simulation Program with Multisim

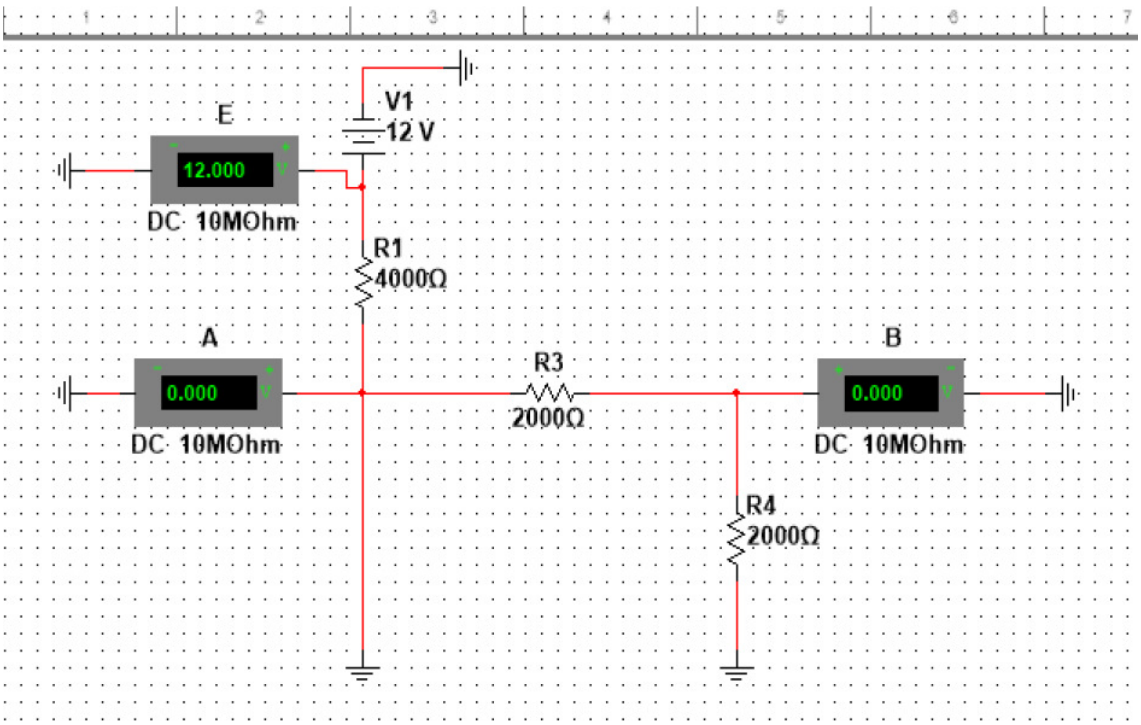

Appendix 4 . Examination

1. Analyze picture and draw the circuit (Input at channel A and output at channel B)

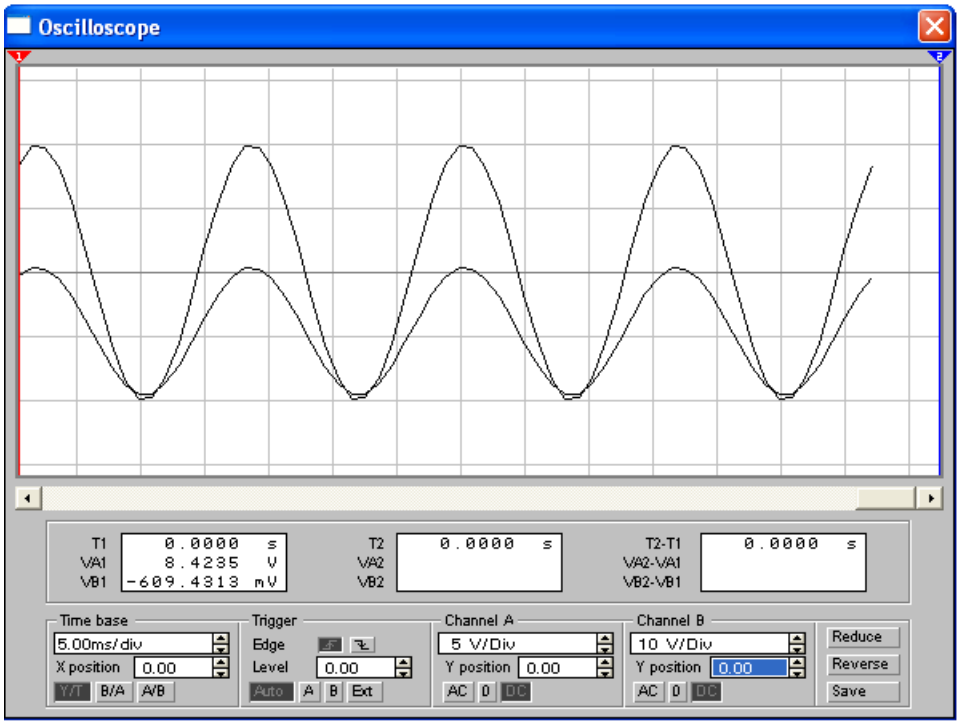

2. If we measure VB = 6 V, find the trouble of circuit !

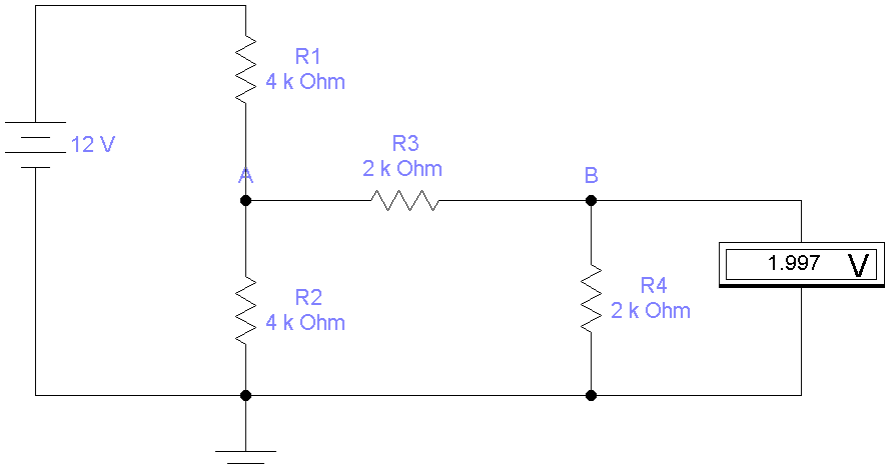

3. Design a zener regulator to meet these specifications: Load voltages are +12V and -12V and load current 20 mA. Please use a transformer 10:1 and a bridge rectifier. Proof your design, whether regulator works still well, if the ac line voltage of PLN in your area varies 10 %.